IDENTIFYING MINERALS

Crystal Structure

Physical Properties

<u>Crystal:</u> a single, uninterrupted solid with a regular, repeating arrangement of atoms bound by flat surfaces that grow as a mineral forms

Crystals Grow:

- outward from a single seed
- atoms in the surrounding material attach themselves to the face of the seed in a regular pattern
- Atoms are held together by chemical bonds
- Youngest part of crystal is its outer edge

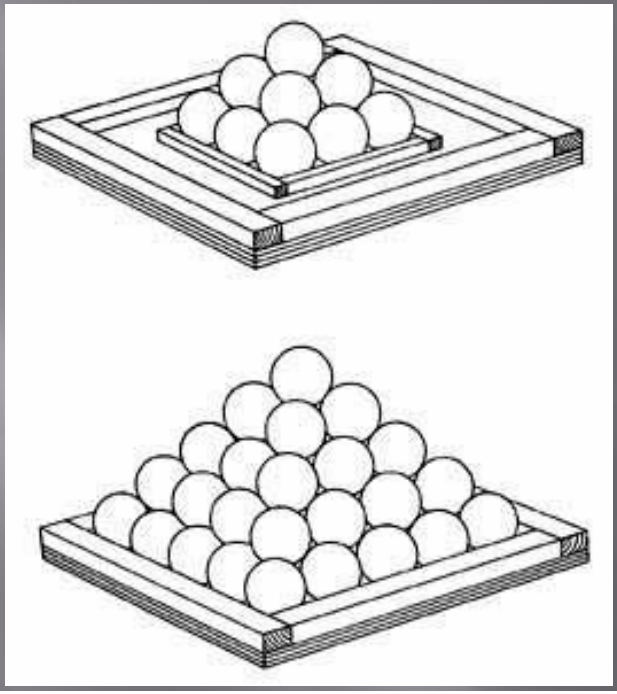

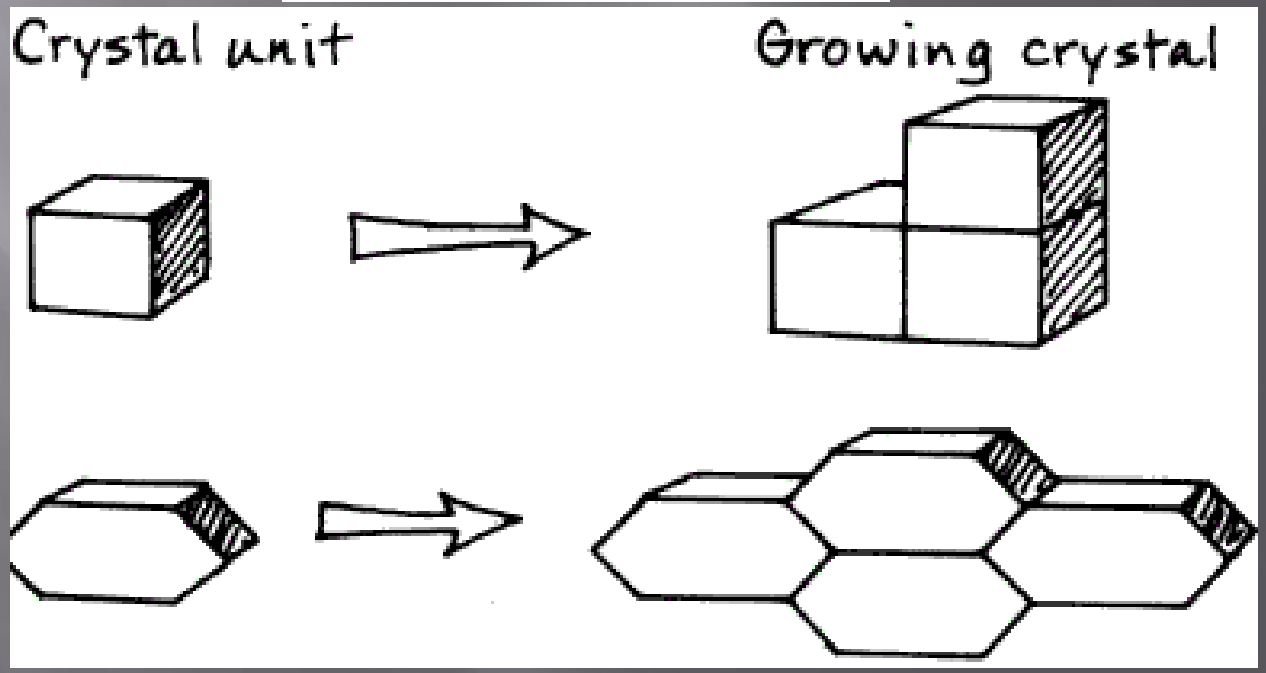
Crystal unit
Growing crystal

Mineral Crystals form by:

1. **Freezing :** solidification of a melt. Ex. Ice crystals
2. **Precipitation from solution:** atoms dissolved in water bond and separate out. Ex. Salt crystals from seawater
3. **Precipitation from gas:** volcanic gases enters atmosphere and cools abruptly. Ex Sulfur deposits
4. **Diffusion in a solid:** rearrangement of atoms at high temps. Ex. Limestone to marble, garnets


Salt on matrix © Smithsonian Institution

6 Crystal Systems Exist

1. Isometric
2. Tetragonal
3. Hexagonal
4. Orthorhombic
5. Monoclinic
6. Triclinic

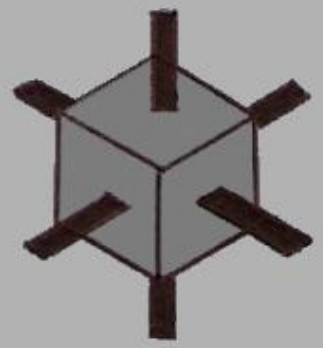

ISOMETRIC
All axial angles
are 90 degrees,
all axes equal length

TETRAGONAL
All axial angles
90 degrees,
1 axis unique

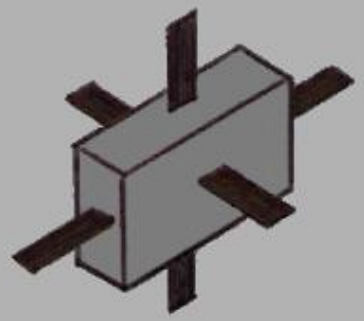

ORTHORHOMBIC
All axial angles
90 degree, all
axes different lengths

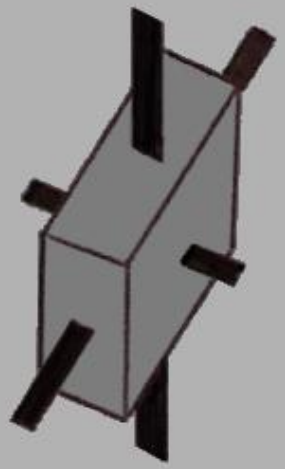

MONOCLINIC
1 axial angle
variable, all axes
different lengths

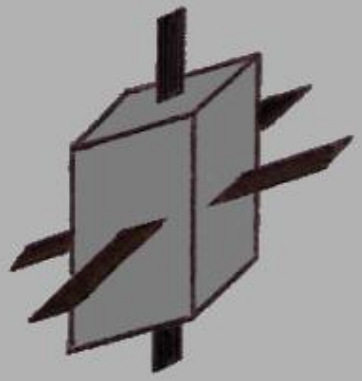

TRICLINIC
All axial angles
and axis
lengths variable

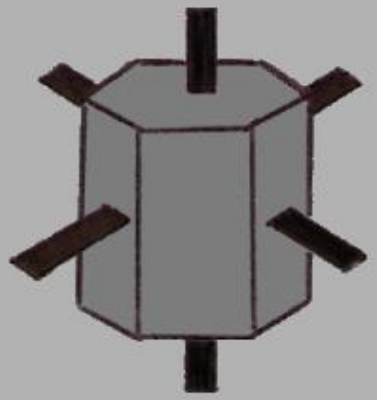

HEXAGONAL
2 equal axes in plane
at 120 degrees, third
axis perpendicular
and different length

- Angles between crystal faces are the same
- Big Crystals need Time and Space (open cavities)
- Shape is controlled by surroundings
- <u>Geode:</u> a mineral-lined cavity in rock

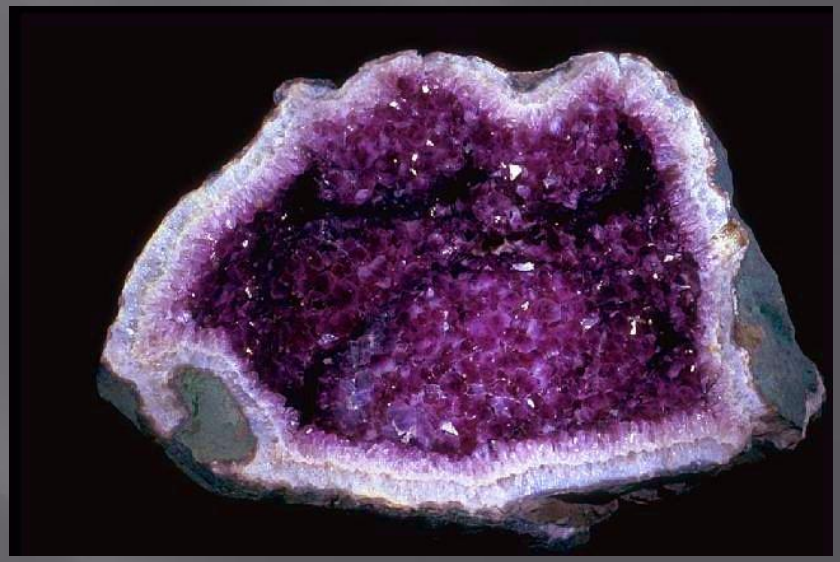

Identifying Minerals Physical properties

1. <u>Color</u> – the way the mineral interacts with light
   - Some minerals have multiple colors
2. <u>Streak</u> – the color of the powder produced by the mineral

   Scrape mineral against a ceramic plate

3. <u>Luster</u> – the way the mineral surface scatters light
- Metallic vs. Non Metallic

4. <u>Hardness</u> – measure of a minerals ability to resist scratching
- Moh's hardness scale
- 1 – 10
- 1 =Talc: softest , 10 = Diamond: hardest
- Mineral can scratch those lower in scale, not higher!

5. **<u>Crystal Habit</u> – the preferred crystal shape that forms when a mineral grows unimpeded**
6. **<u>Breakage</u>**
   a. **<u>Cleavage:</u> tendency of minerals to break along weak bonds, producing flat surfaces**
   b. **<u>Fracture:</u> irregular broken surfaces (no weak zones)**

7. **<u>Specific Gravity</u> : represents the density of a mineral as compared to the density of water**
8. **<u>Magnetism</u> : attracted to a magnet or acts like one**
9. **<u>Feel</u> : Greasy, slippery**
10. **<u>Taste: </u>salty, bitter * <u>only taste if instructed </u>after possibilities have been narrowed down!**

11. **Odor : certain minerals have a distinctive odor**

12. **Reaction with dilute Hydrocloric Acid : minerals containing a carbonate anion fizz when HCl is dropped on them**